57114

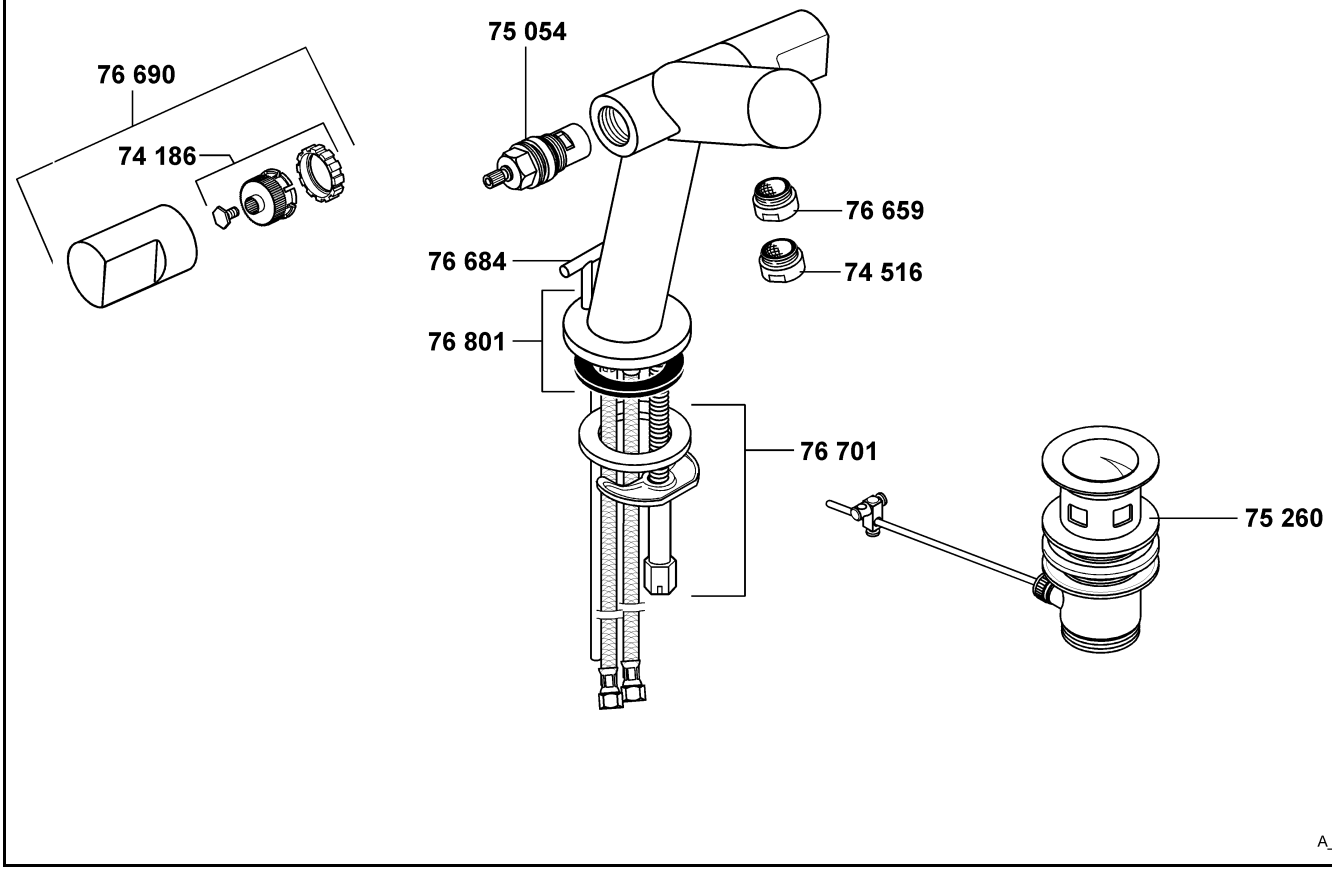


| 57114 | | Waschtischarmatur DN 10 | basin mixer DN 10 | wastafelmengkraan 3/8" |
|---|---|---|---|---|
| | 74 186 | Rastbuchse | insert | klemnok |
| | 74 516 | s-pointer Luftsprudler M 24 x 1/Z | s-pointer aerator M 24 x 1/Z | s-pointer perlator M 24 x 1/Z |
| | 75 054 | Keramik-Oberteil G 1/2, 90° | ceramic headpart G 1/2, 90° | keramisch bovendeel G 1/2, 90° |
| | 75 260 | Ablaufgarnitur | pop up waste | afvoergarnituur |
| | 76 659 | Cascade-Strahlregler | Cascade-flow straightener | cascade straalbreker |
| | 76 684 | Zugstange | lift rod | trekstang |
| | 76 690 | Griff KLUDI NEW WAVES | handle KLUDI NEW WAVES | greep KLUDI NEW WAVES |
| | 76 701 | Befestigungssatz | assembling set | bevestigingsset |
| | 76 801 | Rosette | wall flange | rozet |